Rebar Cutter Instruction
& Parts Breakdown

4PRORC16T, 4PRORC16G, 4PRORC20T, 4PRORC20G

IMPORTANT: READ THESE INSTRUCTIONS CAREFULLY BEFORE ATTEMPTING TO USE YOUR TOOL

Not knowing the proper operating procedures can lead to accidents. If you have any questions about any procedures, contact the nearest authorized distributor/agent

CONTENTS

GENERAL SAFETY PRECAUTIONS

Use rebar cutters on maximum Grade 60 steel reinforcing bars only. These tools are not to be used in cutting other kinds of metal or materials. Do not cut ungraded rebar.

RESTRICT USE TO DESIGNATED MATERIALS

There is always a chance that the cut end may shoot out, especially if less than 30cm (1 foot) in length. Exceeding designated material specifications greatly increases this risk and will also damage the tool. Do not attempt to cut rebars harder, thicker or thinner than specified.

USE EYE PROTECTION

Wear safety goggles, safety glasses with side shields or a face shield when using cutter.

PROVIDE SAFETY BARRIERS

Erect safety screens to protect coworkers from possible flying ends. Place a safety screen under the rebar when working in high places.

EXERCISE PROPER CONTROL

Hold cutter firmly and maintain proper footing and balance. Do not overreach. When working in a high place, secure cutter to scaffolding with a safety rope. Check that power cord is not fouled and keep cord away from sharp edges and heat. Check that all adjusting wrenches have been removed before using cutter.

GUARD AGAINST ELECTRIC SHOCK

To avoid possible shock, do not handle cutter with wet hands or use cutter in the rain or damp places. Be aware of all power lines, electric circuits and other hazards that may be contacted, especially those that are below the surface or otherwise hidden from view. Never attempt to pick the tool up by use of the electric cord.

UNPLUG TOOL

Disconnect cutter from outlet when not in use and before cleaning, adjusting or servicing. Do not disconnect plug from outlet by pulling the cord. Always check that the switch lock is OFF before plugging in.

DO NOT CUT UNGRADED REBAR

MAINTAIN CUTTER WITH CARE

Inspect cutter before each application. Faulty or loose cutter blocks could result is personal injury. Keep handle dry, clean and free from oil and/or grease. Keep housing and piston free of dirt and iron filings. Check that no screws or bolts are loose or missing. Follow instructions for maintenance. Inspect switch, cord, plug and any extension cable at regular intervals. It is a good idea to inspect the housing for any cracks before operating.

DO NOT EXCEED MAXIMUM CUTTING PRESSURE BY ADDING TO OR MODIFYING THE HYDRAULIC PUMP.

BLEEDING YOUR PORTABLE REBAR CUTTER

You may have to bleed the hydraulics on your cutter if the tool runs unusually slow or doesn't have the pressure to cut normally. Do not run tool with low or no oil. For best results please follow these directions:

1. If piston is still moving, run the tool for 2 minutes to warm the oil inside. If the piston is not moving, add oil before warming up for 2 minutes.

2. When the oil is warm, run the piston out just before it returns and stop.

3. Remove the oil plug and top it off with oil.

4. Make a seal with your thumb over the oil plug opening.

5. Run the tool so that it makes a complete cycle.

6. When the piston is completely retracted in the open position, gently roll your thumb to let the unwanted air escape.

7. Repeat step #5 and #6 at least three times.

8. Add oil only when the piston is at least halfway out.

9. If you have to add additional oil, repeat #5 and #6.

10. Replace the oil plug and tighten it.

11. Make three or four cuts with rebar. The machine should now be working properly. Make sure that you observe exactly at what point the rebar is actually breaking.

12. Pinch a piece of rebar stopping just before it actually breaks.

13. Remove the oil plug again and top off the reserve one more time.

14. Replace the oil plug and tighten

15. The operation is now complete.

We recommend the following 20-wieght Non-Detergent Hydraulic Oils for use with our tools (anti-foam anti-abrasion): Tellus 68 (Shell), Rando HD 68 (Texaco) or Chevron AW 68 (Chevron). Hydraulic oil can also be ordered in quart containers from your Diamond Tool Distributor.

OPERATING INSTRUCTIONS

CAUTION: Indicates hazard that could result in minor personal injury and/or product damage.

CARE: Indicates hazard that will result in product damage.

PRE-USE CHECKS

1. Check oil level. (See Maintenance)

2. Check condition of cutter blocks and tightness of cutter block bolts. (See Maintenance) - CHECK FOR CRACKS IN HOUSING

CAUTION: Using loose or cracked cutter blocks may result in injury to operator as well as damage to the tool.

3. Check that the power source is appropriate to the cutter.

CARE: If voltage is too high, the motor will burn out. If voltage is too low, insufficient power will be generated. Never use DC current.

4. Check that power supply is properly grounded.

CAUTION: Failure to ground power supply may result in electric shock to operator (RC-16A, RC-16B and RC-25 have double-insulated motors and do not require grounding.)

5. Check that cord is undamaged and that plug is not loose.

CAUTION: Cut or abraded covering could result in a short and Electric shock to operator.

6. If an extensions cable is to be used, make sure that it is undamaged and that it is the proper wire gauge thickness for the length. See table below.

Length	110/115 50/60 Hz Cable Size (AWG)
Up to 15mm (50 ft.)	14
Up to 30mm (100 ft.)	12
Up to 45mm (150 ft.)	10

WARM-UP

In cold weather you should warm up the tool unit for 30-60 seconds so that the hydraulic oil reaches the proper viscosity. Pull trigger-switch to extend piston and release when it has reached its full stroke. Repeat 15-20 times.

STOPPER BOLT ADJUSTMENT

THE STOPPER BOLT IS PROBABLY THE MOST IMPORTANT PART OF YOUR PORTABLE CUTTER...

The adjustable stopper functions to maintain the rebar in the correct position during cutting and must be properly set for each size of rebar before use.

1. Screw in stopper to provide sufficient clearance for rebar.

2. Insert rebar fully into U-shaped support. Make sure that rebar is resting on the base of the support.

3. Keeping rebar at right angles (90 degrees) to front cutter block, screw out stopper until it is just touching the rebar. Once set, the stopper needs no further adjustment while cutting rebar of the same diameter, but must be reset for a different size rebar.

CAUTION: Failure to correctly set the stopper bolt will result in excessive wear of cutter blocks and may cause cut end to fly out. This will also lead to piston and cylinder damage.

CUTTING

1. Insert rebar between stopper and front cutter block, making sure that it is properly seated in U-shaped support.

2. Pull trigger-switch and keep depressed while piston advances and rebar is cut. (If switch is released at an intermediate point, piston will stop.)

3. When cut is completed, release switch. Piston retracts automatically (Note that switch cannot be reactivated until piston has fully retracted.)

POINTS OF ATTENTION

1. Be especially careful when cutting off short lengths (30cm/12" or less) as the cut end tends to fly out.

CAUTION: Flying ends are a hazard to all personnel in the vicinity. Erect safety screens.

2. Do not cover air vents or operate the tool on dirt - use a plywood base under the rebar cutter to keep armature and fan clean

CARE: If the vents are covered, the motor will overheat and may burn out.

3. If hydraulic oil exceeds 70 degrees C (158 degrees F) in temperature, power will drop. Allow unit to cool before resuming operation. (Be particularly careful in summer, when the aluminum pump case heats up quicker.)

4. If a drop in power is observed and motor is unusually hot, check carbon-brushes. (See maintenance)

5. If piston should ever fail to retract completely, push rear cutter block backwards to manually retract piston or check under piston to remove and debris keeping the piston from retracting.

CAUTION: Use a rebar or flat metal bar for this purpose. Never push cutter block with any part of the hand, even if gloved.

NOTE: Rebar cutters have a safety release valve for retracting the piston if it doesn't return to the start position. This is usually caused by cutting improperly seated rebar that becomes jammed between the cutting blocks.

Once piston has been retracted, pull trigger-switch long enough to partially	advance piston. Unplug unit. Check piston and housing for accumulated dirt and iron filings that may be jamming the pis-	ton. (See Maintenance) If, after cleaning, piston still does not automatically retract when fully extended, the piston itself may

be damaged.

MAINTENANCE ON CUTTER BLOCKS

Before using, always check that the two bolts on each cutter block are properly tightened. Using a loose block will result in damage to block and housing. Also check condition of cutter blocks. If either cutting edge is dull or chipped, remove retaining bolts and rotate both blocks so that two new edges come into use. Replace and tighten bolts. (Each block has four cutting edges.) When all four cutting

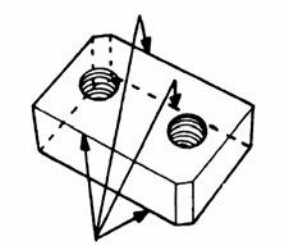

edges have been used or if either block is cracked or otherwise damaged, replace both blocks.

CAUTION: A loose or cracked block may result in injury to operator.

CLEANING

Clean your tool every day, preferably im mediately after use.

CAUTION: Wear gloves to protect hands from metal splinters.

Do not use an air gun: blasting with air can cause metal filings and/or dust to get into eyes and respiratory system.

Disconnect the unit. Wipe or brush away all dirt and metal filings. Pay particular attention to the lower half of the piston, where dirt is more easily accumulated.

NEVER USE YOUR CUTTER TO CUT REBAR IN WET CONCRETE.

OIL-LEVEL CHECK

As the cutters are hydraulically operated, the oil-level must be checked at frequent intervals, preferably every day. Failure to maintain the oil at the proper level results in a drop in pressure and loss of cutting power.

CAUTION: Hydraulic oil is highly flammable. Keep away from sparks and naked flame. Do not smoke.

CAUTION: Hydraulic oil may cause inflammation of the eyes and skin. If ingested, it will cause diarrhea and vomiting. In case of eye contact, rinse in clean water for at least 15 min- utes and consult a physician. In case of skin contact, wash thoroughly with soap and water. In case of ingestion, consult a physician immediately. Do not induce vomiting.

1. Oil should be warm but not hot. Warm up unit if cold.

2. Adjust stopper and make three or four cuts, noting exactly at what point the rebar is actually breaking.

3. Pinch a short piece of rebar, stopping just before it breaks off. Unplug unit from power source.

4. With partially severed rebar in place, oil-plug should be straight up. (If unit is hot, allow cooling down.)

5. Remove oil-plug and seal-washer (packing).

CAUTION: Never remove oil-plug when unit is hot or oil will spurt out.

6. Check that oil is level with bottom of plug hole (i.e. that pump case if full to the brim).

If oil level is too low, top up with 20-weight hydraulic oil with anti-foam and anti-abrasion properties (ISO viscosity grade VG46, e.g. Shell oil Tellus 68, Mobil oil DTE-25 or Esso Uni power SQ46).

7. After topping off, extract air from system. Gently tilt cutter lengthwise and return it to a level position. Top off again and tilt in the opposite direction. Repeat this process until all air has been extracted.

CARE: Cutter cannot function properly if oil contains air bubbles.

8. Replace seal washer (packing) and oil plug. Connect cutter to power source and completely sever rebar.

OIL-CHANGE

The hydraulic oil should be changed at least once a year, sooner if it appears dirty.

NOTE: Hydraulic oil should be warm before draining

1. Unplug unit from power source. Remove oil-plug and packing. Turn cutter over and drain oil into a suitable receptacle. When oil ceases to drain out, tilt unit to rear so that oil trapped in the piston housing can run out. When housing is empty, tilt unit in the opposite direction to empty the residue in the pump case.
2. With drain-hole uppermost, slowly fill the unit with fresh oil. Replace plug and lightly tighten. Connect unit to power source and advance piston two or three times. Unplug unit and remove oil-plug. Top off oil-level and replace plug.

3. Finally, follow procedure for oil-level check. (Steps 2-8)

NOTE: Dispose of hydraulic oil in accordance with local regulations. Do not pour into the sea, a river, a lake or drains.

BOLT TIGHTNESS

Once a week, or after every 500 cuts, check the tightness of all bolts; especially those bolts securing the housing to the cylinder. Loose bolts will result in a loss of power. Make sure that the bolts holding both cutter blocks are also tight

CARBON BRUSHES

Inspect the two carbon brushes at least once every two months. (Nominal brush life is 200 hours).

CARE: Worn brushes will result in power loss, cause the motor to run hot and irreparably damage the armature.

1. Disconnect unit.
2. Unscrew both brush caps and pull out carbon brushes.
3. Replace brushes if less than 6mm or1/4" in length.

OVERHAUL

Return the unit to an authorized agent for overhaul at least once every two years, sooner if subjected to heavy use.

GENERAL SAFETY RULES

WARNING: Read all instructions. Failure to follow all instructions listed below may result in electric shock, fire and/or serious injury. The term "power tool" in all of the warnings listed below refers to your mains-operated (corded) power tool or battery-operated (cordless) power tool.

SAVE THESE INSTRUCTIONS

WORK AREA SAFETY

Keep work area clean and well lit. Cluttered or dark areas invite accidents.

Do not operate power tools in explosive atmospheres, such as in the presence of flammable liquids, gases or dust. Power tools create sparks which may ignite the dust or fumes.

Keep children and bystanders away while operating a power tool. Distractions can cause you to lose control.

ELECTRICAL SAFETY

Power tool plugs must match the outlet. Never modify the plug in any way. Do not use any adapter plugs with earthed (grounded) power tools. Unmodified plugs and matching outlets will reduce risk of electric shock.

Avoid body contact with earthed or grounded surfaces such as pipes, radiators, ranges and refrigerators. There is an increased risk of electric shock if your body is earthed or grounded.

Do not expose power tools to rain or wet conditions. Water entering a power tool will increase the risk of electric shock.

Do not abuse the cord. Never use the cord for carrying, pulling or unplugging the power tool. Keep cord away from heat, oil sharp edges or moving parts. Damaged or entangled cords increase the risk of electric shock.

When operating a power tool outdoors, use an extension cord suitable to outdoor use. Use a cord suitable for outdoor use reduces the risk of electric shock.

PERSONAL SAFETY

Stay alert, watch what you are doing and use common sense when operating a power tool. Do not use a power tool while you are tired or under the influ- ence of drugs, alcohol or medication. A moment of inattention while operating power tools may result in serious per- sonal injury.

Use safety equipment. Always wear eye protection. Safety equipment such as dust mask, non-skid safety shoes, hard hat, or hearing protection used for ap- propriate conditions will reduce personal injuries.

Avoid accidental starting. Ensure the switch is in the off-position before plugging in. Carrying power tools with your finger on the switch or plugging in power tools that have the switch on invites accidents.

Remove any adjusting key or wrench before turning the power tool on. A wrench or a key left attached to a rotating part of the power tool may result in personal injury.

Do not overreach. Keep proper footing and balance at all times. This enables better control of the power tool in unexpected situations.Dress properly. Do not wear loose clothing or jewelry. Keep your hair, clothing and gloves away from moving parts. Loose clothes, jewelry or long hair can be caught in moving parts.

If devices are provided for the connection of dust extraction and collection facilities, ensure these are connected and properly used. Use of these devices can reduce dust-related hazards.

POWER TOOL USE AND CARE

Do not force the power tool. Use the correct power tool for your application. The correct power tool will do the job better and safer at the rate for which it was designed .
Do not use the power tool if the switch does not turn it on and off. Any power tool that cannot be controlled with the switch is dangerous and must be repaired.

Disconnect the plug from the power source and/or the battery pack from the power tool before making any adjustments, changing accessories, or storing power tools. Such preventative safety measures reduce the risk of starting the power tool accidentally.

Store idle power tools out of the reach of children and do not allow persons unfamiliar with the power tools or these instructions to operate the power tool. Power tools are dangerous in the hands of untrained users.

Maintain power tools. Check for misalignment or binding or moving parts, breakage of parts and any other condition that may affect the power tools operation. If damaged, have the power tool repaired before use. Many accidents are caused by poorly maintained power tools.

Keep cutting tools sharp and clean. Properly maintained cutting tools with sharp cutting edges are less likely to bind and are easier to control.

Use the power tool, accessories and tool bits etc., in accordance with these instructions and in the manner intended for the particular type of power tool, tak- ing into account the working conditions and the work to be performed. Use of the power tool for operations different from those intended could result in a hazardous situation.

SERVICE

Have your power tool serviced by a qualified repair person using only identical replacement parts. This will ensure that the safety of the power tool is maintained.

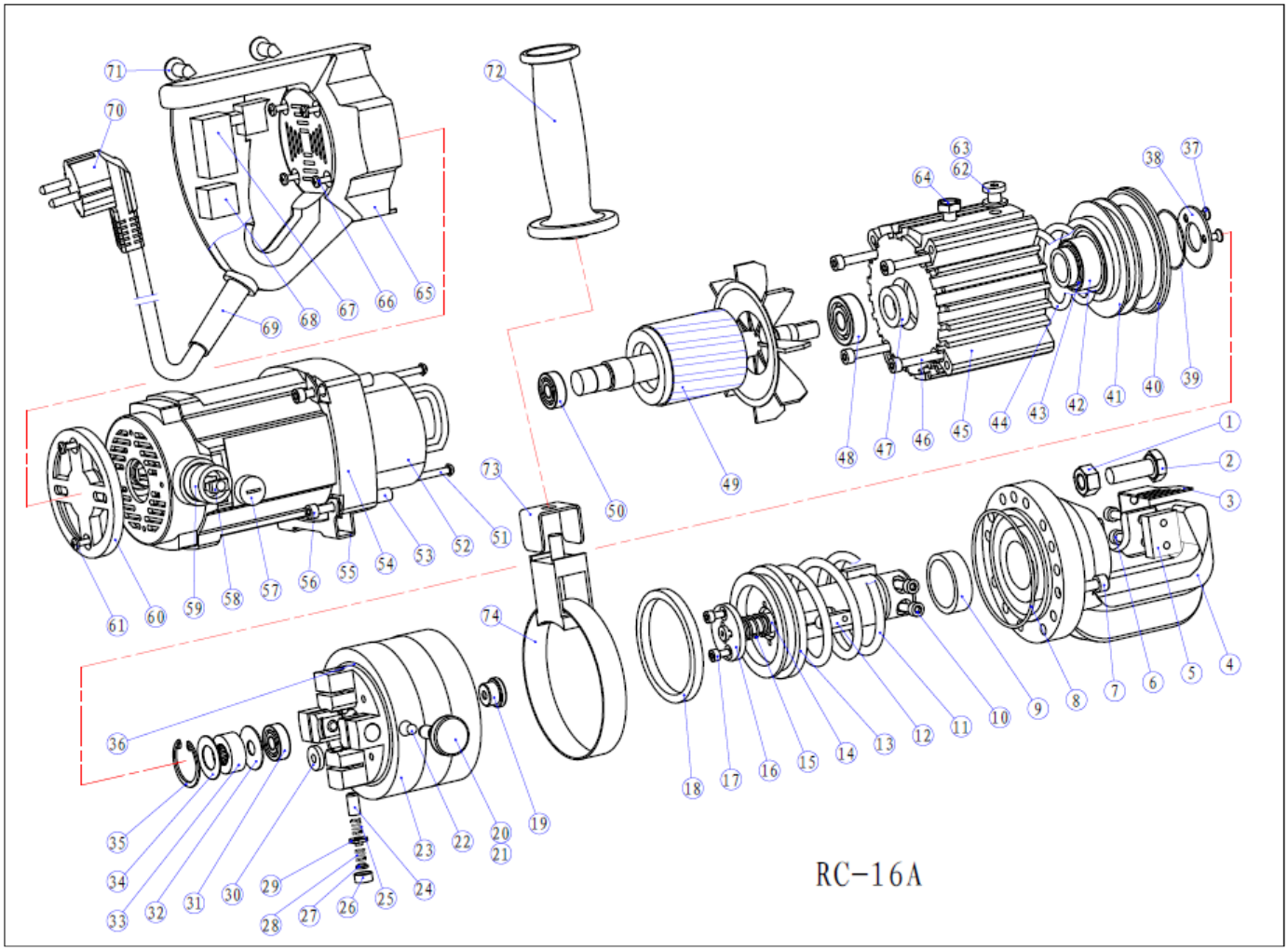

4PRORC16T Rebar cutter										
No	Part Name	Piece		25	Ram Return Spring	4		51	Tapping Screw D5*60	2
1	Nut M10	1		26	Pump Head Seal	4		52	Stator	1
2	Stopper Bolt M10*40	1		27	Spring Guide	4		53	Sleeve	4
3	Cutter Guard	1		28	Delivery ValveSpring	4		54	Motor Housing	1
4	Housing	1		29	Delivery Valve	4		55	Foot	1
5	Cutter Block set	1		30	Magnet	2		56	Cap BOLT M5*35	4
6	Cap BOLT M5*18	2		31	Ball Bearing 608	1		57	Brush Cap	2
7	Cap BOLT M6*20	14		32	Bearing Guide	1		58	Carbon Brush Set	2
8	O-ring 70*1.9	1		33	Needle Bearing	1		59	Brush Holder	2
9	Seal Packing Sky 30	1		34	Bearing Guide	1		60	BearingCover	1
10	Cap BOLT M5*18	2		35	Snap Ring H27	1		61	PanHeadBolt M3.5*12	2
11	Return Spring	1		36	O-ring 73*1.9	1		62	Plug screw	1
12	Piston Key 8*25	1		37	Cap BOLT M4*8	1		63	Composite gasket	1
13	Piston	1		38	Limit circle	1		64	Muffler	1
14	Return Valve	1		39	O-ring 32*3.5	1		65	Motor cover	1
15	Spring	1		40	Seal Packing 73*63*6	1		66	PanHeadBolt M4*15	4
16	Valve Core	1		41	Piston	1		67	Switch	1
17	Cap BOLT M4*8	2		42	Piston Rod	1		68	Condenser	1
18	Seal Packing 70*60*6	1		43	O-ring 30*1.9	1		69	Cord Armer	1
19	Sealed Spindle	1		44	Spring	1		70	Cord Set	1
20	Retreat Switch	1		45	Cylinder	1		71	PanHeadBolt M3.5*8	2
21	O-ring 9*1.9	1		46	Cap BOLT M5*75	4		72	Side Handle	1
22	Steel Ball D6	1		47	Oil Seal	1		73	Gasket	1
				48	Ball Bearing 6002VV	1		74	Pull ring	1

23	Pump Body	1		49	Rotor	1					
24	Ram	4		50	Ball Bearing 608	1					

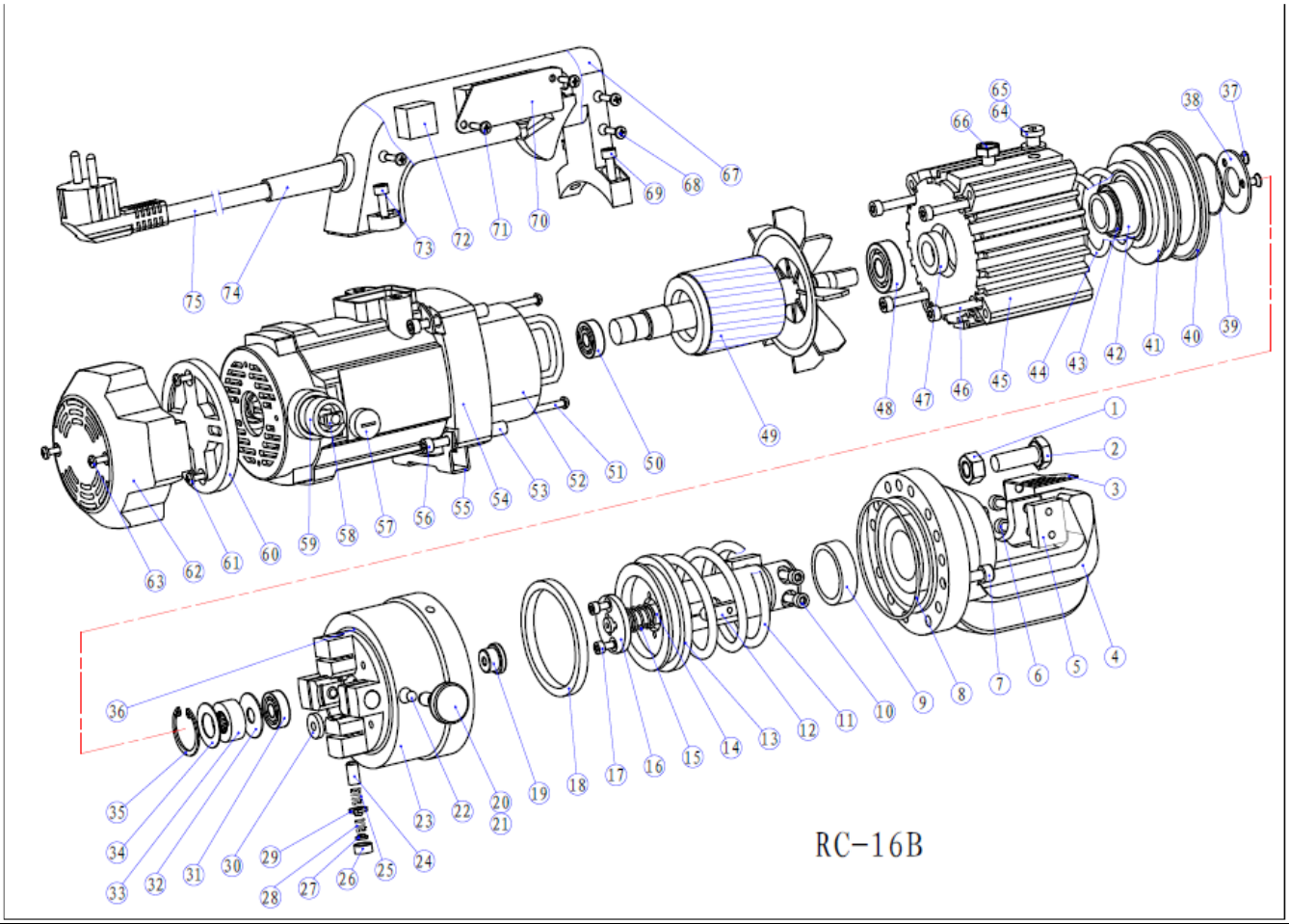

4PRORC16G Rebar cutter											
No.	Part Name	Pieces		27	Spring Guide	4		55	Foot	1
1	Nut M10	1		28	Delivery ValveSpring	4		56	Cap BOLT M5*35	4
2	Stopper Bolt M10*40	1		29	Delivery Valve	4		57	Brush Cap	2
3	Cutter Guard	1		30	Magnet	2		58	Carbon Brush Set	2
4	Housing	1		31	Ball Bearing 608	1		59	Brush Holder	2
5	Cutter Block set	1		32	Bearing Guide	1		60	BearingCover	1
6	Cap Bolt M5*18	2		33	Needle Bearing	1		61	PanHeadBolt M3.5*12	2
7	Cap Bolt M6*20	14		34	Bearing Guide	1		62	Motor cover	1
8	O-ring 70*1.9	1		35	Snap Ring H27	1		63	PanHeadBolt M3.5*20	2
9	Seal Packing Sky 30	1		36	O-ring 73*1.9	1		64	Plug screw	1
10	Cap Bolt M5*18	2		37	Cap Bolt M4*8	1		65	Composite gasket	1
11	Return Spring	1		38	Limit circle	1		66	Muffler	1
12	Piston Key 8*25	1		39	O-ring 32*3.5	1		67	Side Handle	1
13	Piston	1		40	Seal Packing 73*63*6	1		68	PanHeadBolt M3.5*12	2
14	Return Valve	1		41	Piston	1		69	Cap Bolt M5*18	2
15	Spring	1		42	Piston Rod	1		70	Switch	1
16	Valve Core	1		43	O-ring 30*1.9	1		71	PanHeadBolt M3.5*12	
17	Cap Bolt M4*8	2		44	Spring	1		72	Condenser	1
18	Seal Packing 70*60*6	1		45	Cylinder	1		73	Cap Bolt M5*18	2
19	Sealed Spindle	1		46	Cap Bolt M5*75	4		74	Cord Armer	1
20	Retreat Switch	1		47	Oil Seal	1		75	Cord Set	1
21	O-ring 9*1.9	1		48	Ball Bearing 6002VV	1				
				49	Rotor	1				

22	Steel Ball D6	1		50	Ball Bearing 608	1				
23	Pump Body	1		51	Tapping Screw D5*60	2				
24	Ram	4		52	Stator	1				
25	Ram Return Spring	4		53	Sleeve	4				
26	Pump Head Seal	4		54	Motor Housing	1				

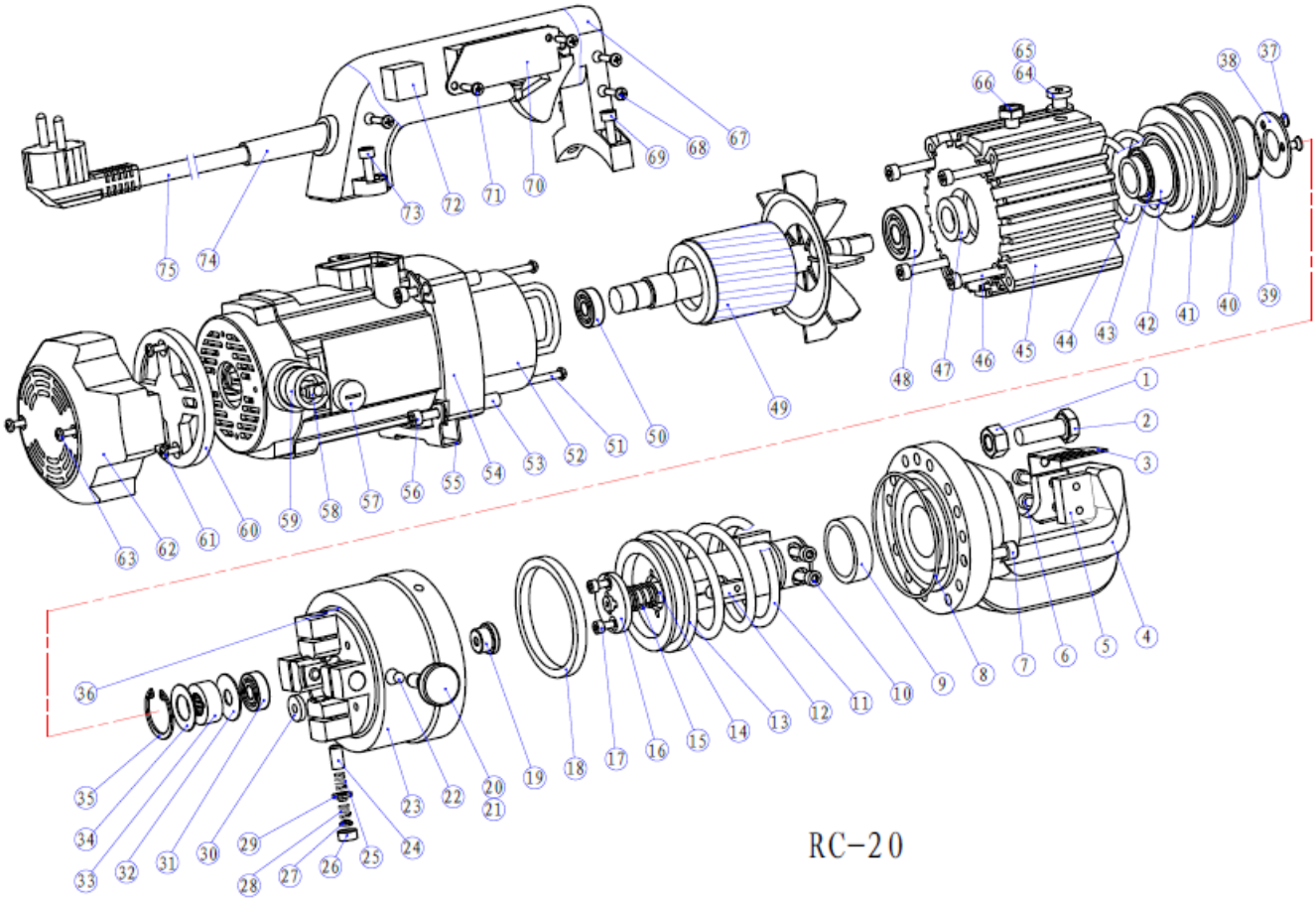

4PRORC20G Rebar cutter										
No	Part Name	Piece		27	Spring Guide	4		55	Foot	1
				28	Delivery ValveSpring	4		56	Cap BOLT M5*35	4
1	Nut M12	1		29	Delivery Valve	4		57	Brush Cap	2
2	Stopper Bolt M12*40	1		30	Magnet	2		58	Carbon Brush Set	2
3	Cutter Guard	1		31	Ball Bearing 608	1		59	Brush Holder	2
4	Housing	1		32	Bearing Guide	1		60	BearingCover	1
5	Cutter Block Set	1		33	Needle Bearing	1		61	PanHeadBolt M3.5*12	2
6	Cap Bolt M5*18	2		34	Bearing Guide	1		62	Motor cover	1
7	Cap Bolt M8*25	14		35	Snap Ring H27	1		63	PanHeadBolt M3.5*20	1
8	O-ring 75*1.9	1		36	O-ring 73*1.9	1		64	Plug screw	1
9	Seal Packing Sky 35	1		37	Cap BOLT M4*8	1		65	Composite gasket	1
10	Cap BOLT M5*18	2		38	Limit circle	1		66	Muffler	1
11	Return Spring	1		39	O-ring 32*3.5	1		67	Side Handle	1
12	Piston Key 10*30	1		40	Seal Packing 73*63*6	1		68	PanHeadBolt M3.5*12	1
13	Piston	1		41	Piston	1		69	Cap Bolt M5*18	1
14	Return Valve	1		42	Piston Rod	1		70	Switch	1
15	Spring	1		43	O-ring 30*1.9	1		71	PanHeadBolt M3.5*12	2
16	Valve Core	1		44	Spring	1		72	Condenser	1
17	Cap Bolt M4*8	2		45	Cylinder	1		73	Cap Bolt M5*18	1
18	Seal Packing 75*65*6	1		46	Cap BOLT M5*75	4		74	Cord Armer	1

19	Sealed Spindle	1		47	Oil Seal	1		75	Cord Set	1
20	Retreat Switch	1		48	Ball Bearing 6002VV	1				
21	O-ring 9*1.9	1		49	Rotor	1				
22	Steel Ball D6	1		50	Ball Bearing 608	1				
23	Pump Body	1		51	Tapping Screw D5*60	2				
24	Ram	4		52	Stator	1				
25	Ram Return Spring	4		53	Sleeve	4				
26	Pump Head Seal	4		54	Motor Housing	1				

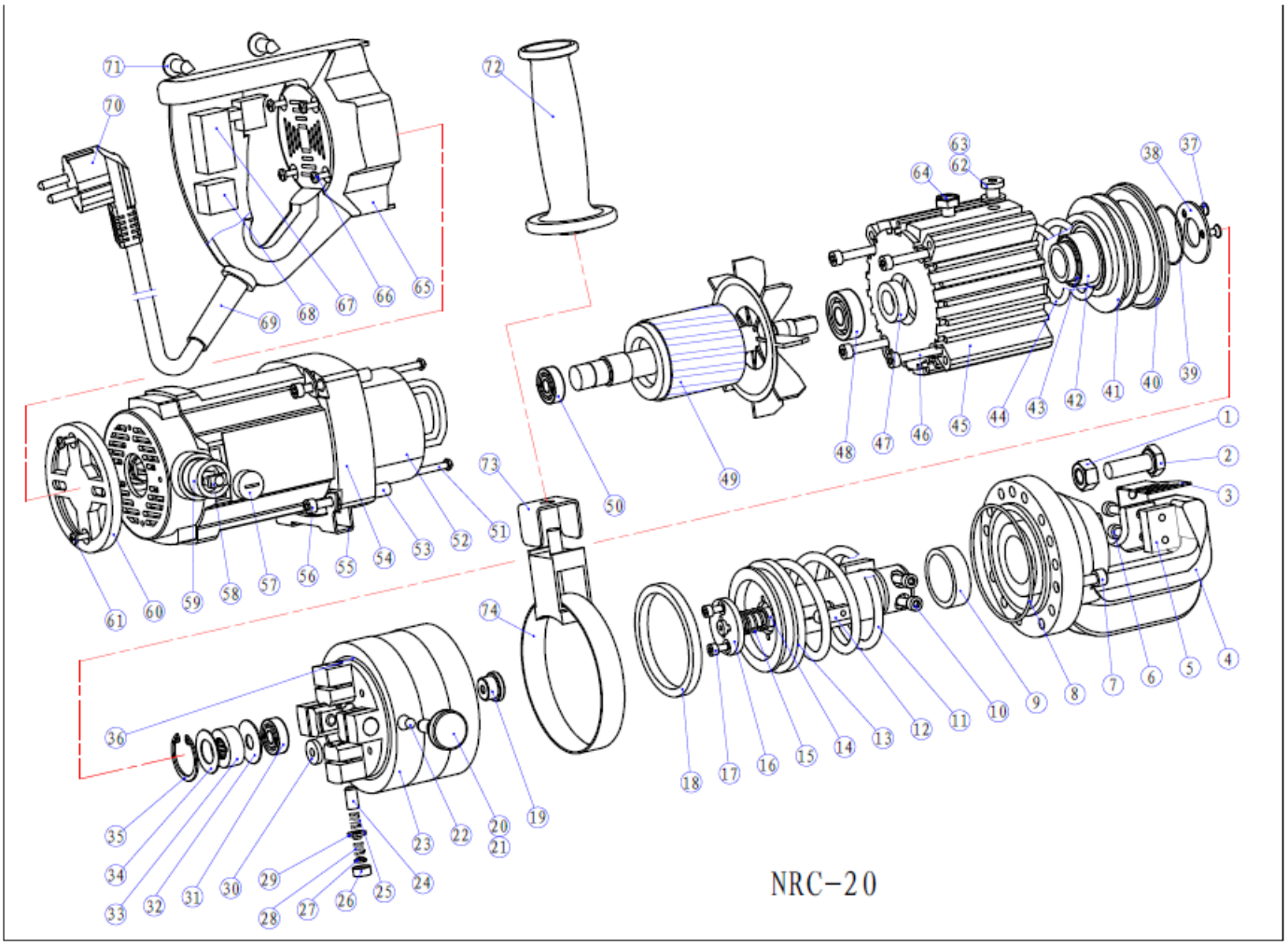

4PRORC20T Rebar cutter										
No	Part Name	Piece		26	Pump Head Seal	4		53	Sleeve	4
1	Nut M12	1		27	Spring Guide	4		54	Motor Housing	1
2	Stopper Bolt M12*40	1		28	Delivery ValveSpring	4		55	Foot	1
3	Cutter Guard	1		29	Delivery Valve	4		56	Cap BOLT M5*35	4
4	Housing	1		30	Magnet	2		57	Brush Cap	2
5	Cutter Block set	1		31	Ball Bearing 608	1		58	Carbon Brush Set	2
6	Cap BOLT M5*18	2		32	Bearing Guide	1		59	Brush Holder	2
7	Cap BOLT M8*25	14		33	Needle Bearing	1		60	BearingCover	1
8	O-ring 75*1.9	1		34	Bearing Guide	1		61	PanHeadBolt M3.5*12	2
9	Seal Packing Sky 35	1		35	Snap Ring H27	1		62	Plug screw	1
10	Cap BOLT M5*18	2		36	O-ring 73*1.9	1		63	Composite gasket	1
11	Return Spring	1		37	Cap BOLT M4*8	1		64	Muffler	1
12	Piston Key 10*30	1		38	Limit circle	1		65	Motor cover	1
				39	O-ring 32*3.5	1		66	PanHeadBolt M4*15	4

13	Piston	1		40	Seal Packing 73*63*6	1		67	Switch	1
14	Return Valve	1		41	Piston	1		68	Condenser	1
15	Spring	1		42	Piston Rod	1		69	Cord Armer	1
16	Valve Core	1		43	O-ring 30*1.9	1		70	Cord Set	1
17	Cap BOLT M4*8	2		44	Spring	1		71	PanHeadBolt M3.5*8	2
18	Seal Packing 75*65*6	1		45	Cylinder	1		72	Side Handle	1
19	Sealed Spindle	1		46	Cap BOLT M5*75	4		73	Gasket	1
20	Retreat Switch	1		47	Oil Seal	1		74	Pull Ring	1
21	O-ring 9*1.9	1		48	Ball Bearing 6002VV	1				
22	Steel Ball D6	1		49	Rotor	1				
23	Pump Case	1		50	Ball Bearing 608	1				
24	Ram	4		51	Tapping Screw D5*60	2				
25	Ram Return Spring	4		52	Stator	1				